REMS Eco-Press

Manual radial press

Universal, manual radial press for producing pipe pressing joints for common pressfitting systems.

Pressing joints with plastic and multi-layer composite tubes Ø 10 – 26 mm
Ø ⅜ – 1"

Complete range of REMS pressing tongs/ pressing rings for all common pressfitting systems, see page 198 – 238.

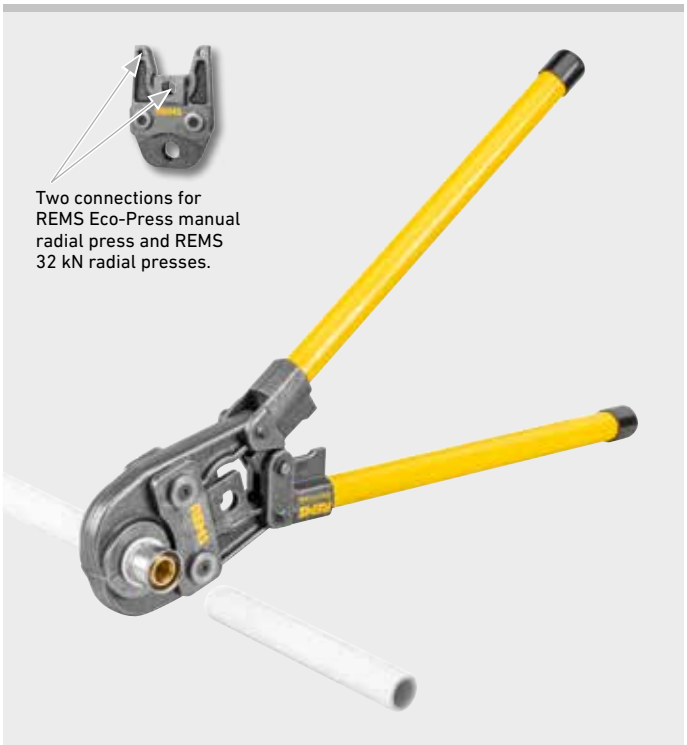

REMS Eco-Press – universal up to Ø 26 mm. Secure crimping in seconds.

System advantage

Only **one** type of pressing tongs/pressing rings for all REMS radial presses 32 kN and suitable radial presses of other makes with 32 kN thrust force.

All pressing tongs marked with * have another connection and also fit the manual radial press REMS Eco-Press. All pressing rings S (PR-2B) marked with ** can also be driven with the manual radial press REMS Eco-Press using the adapter tong Z8.

Pressing tongs/pressing rings for all common systems

Complete assortment of REMS pressing tongs/pressing rings for all common pressfitting systems (page 198 – 238). Highly durable pressing tongs/pressing rings made of tenacious, specially hardened special steel. Pressing contours of REMS pressing tongs/pressing rings are system-specific and correspond to the respective pressfitting system. Thus perfect system conformity, safe press jointing. For driving the REMS pressing rings S (PR-2B) adapter tongs Z8 are required, see page 238.

Design

Compact, handy, light. Drive unit with short tubular arms only 1.6 kg. Works anywhere, free-hand, overhead, in confined areas. Secure seating of pressing tongs through locking pins. Dividable tubular arms for individual adjustment of leverage to accomodate different force demands of different pressfitting systems.

Pressing operation

A perfect joint is achieved when pressing tongs close completely. Final-lock-positioning, the pressing jaws remain in a closed position until opening. This way, the perfect pressing joint (completely closed pressing jaws) can be observed.

German Quality Product

Info

Supply format

REMS Eco-Press drive unit. Manual radial press with final-lock-positioning for producing pressing joints of plastic and multi-layer composite tubes Ø 10 – 26 mm, Ø ⅜ – 1". For driving REMS pressing tongs/pressing rings. With dividable tubular arms. In skin package.

	Art.-No.	€
	574000R	**227,32**

Accessories

Description	Art.-No.	€
REMS pressing tongs/pressing rings, see page 198 – 238.		
Adapter tongs Z8 for driving REMS pressing rings S (PR-2B)	574702R	**144,28**
REMS cropping tongs for threaded rods see page 241.		
Carrying bag for drive unit and for 3 pressing tongs	574436R	**38,41**
Steel case with insert for drive unit and for 3 pressing tongs	574430R	**96,53**