Bending formers and back formers

Accessories for REMS Curvo 50, REMS Curvo and REMS Sinus

Bending formers and back formers, 180°, form and pressure resistant, in high-strength, high-slide, glass-fibre reinforced polyamide or aluminum 90° (Ø 21,3 R 103, Ø 26,9 R 102, Ø 33,7 R 100, Ø 35 R 100, Ø 42 R 140, Ø 42,4 R 140, Ø 50 R 135, Ø 1" R 100, Ø 1¼" R 140). Optimum matching of bending former and back former guarantees material-compatible gliding without cracks and creases. Angle scale provided on each bending former and mark on the back former ensure precise bending. Rapid change of bending formers and back formers.

Bending former and back former for pipes Ø mm/inch O.D.	R mm	X mm 90°	X mm 45°	→ REMS Sinus								→ REMS Curvo								→ REMS Akku-Curvo								→ REMS Curvo 50								Art.-No.
				Cu	Cu-U	St 10312	St 10305-U	St 10305	St 10255	St 50086	V	Cu	Cu 12735	Cu-U	St 10312	St 10305-U	St 10305	St 10255	St 50086	V	Cu	Cu 12735	Cu-U	St 10312	St 10305-U	St 10305	St 10255	St 50086	V	Cu	Cu 12735	Cu-U	St 10312	St 1127	St 10305-U	St 10305	St 10255	St 50086	V	
10	40	45	20	●				●				●					●				●					●				▲						▲				581400
12	45	49	22	●		●		●				●			●		●				●			●		●				▲			▲			▲				581410
14, 10 U, ¼" (DN 6)	50	53	23	●	●			●			●	●		●			●	●		●	●		●			●	●		●	▲		▲				▲	▲		▲	581420
15, 12 U	55	56	25	●		●	●	●				●			●	●	●				●			●	●	●				▲			▲		▲	▲				581430
16, 12 U	60	62	28	●	●			●		●	●	●		●			●		●	●	●		●			●		●	●	▲		▲				▲		▲	▲	581440
17, 15 U	56	60	27				●				●					●				●					●				●						▲				▲	581110
18, 14 U, 15 U, ⅜" (DN 10)	70	75	33	●	●	●		●			●	●		●	●		●	●		●	●		●	●		●	●		●	▲		▲	▲			▲	▲		▲	581450
20, 16 U, 18 U	75	80	36	●	●		●			●	●	●		●				●	●	●	●		●		●			●	●	▲		▲			▲			▲	▲	581080
21.3, ½" (s = 1.6/2.0/2.6)	103	110	50																															■			■			581480
22, 18 U, ½" (DN 15)	77	81	36	●	●			●				●		●	●		●	●			●		●	●		●	●			▲		▲	▲			▲	▲			581460
22, 18 U, ½" (DN 15)	88	91	41									●		●	●		●				●		●	●		●				▲		▲	▲			▲				581470
24, 22 U	75	85	38									●				●					●				●					▲					▲					581130
25	98	103	46								●	●					●		●	●	●					●		●	●	▲						▲		▲	▲	581180
26	98	108	49								●						●			●						●			●							▲			▲	581270
26.9, ¾" (s = 1,6/2.0/2.6)	102	108	49																															■			■			581490
28[1]	102[3]	108	49									●									●									▲										581070
28, ¾" (DN 20)[2]	102	110	50									●			●		●	●			●			●		●				▲			▲			▲	▲			581260
28, ¾" (DN 20)[2]	115	120	54									●			●		●	●			●			●		●				▲			▲			▲	▲			581310
30, 28 U	98	105	47									●				●									●					▲					▲					581150
32	98	110	50								●									●									●										▲	581280
32	114	121	54									●							●	●									●	▲								▲	▲	581320
1" (DN 25)	100	105	47																																		■			581520
33.7, 1" (s = 1.6/2.0/2.6)	100	105	47																															■			■			581520
35	100	105	47																											■			■			■				581500
35	140	150	68									●																		▲			▲							581350
40	140	148	67																	●																			▲	581330
42	140	155	70																											■			■			■				581510
1¼" (DN 32)	140	150	68																																		■			581530
42.4, 1¼" (s = 2.0/2.6)	140	150	68																															■			■			581530
50	135	143	64																																				■	581540
⅜" (9.5 mm)	43	48	22	●								●	●								●	●								▲	▲									581200
½" (12.7 mm)	52	60	27	●								●	●								●	●								▲	▲									581210
⅝" (15.9 mm)	63	70	32	●								●	●								●	●								▲	▲									581220
¾" (19.1 mm)	75	82	37	●								●	●								●	●								▲	▲									581230
⅞" (22.2 mm)	98	107	48	●								●	●								●	●								▲	▲									581240
1" (25.4 mm)	101	112	50									●									●									▲										581370
1⅛" (28.6 mm)	102	110	44									●	●								●	●								▲	▲									581260
1⅛" (28.6 mm)	115	117	53									●									●									▲										581380
1¼" (31.8 mm)	114	123	55									●																		▲	▲									581320
1¼" (31.8 mm)	133	145	65									●																		▲										581390
1⅜" (34.9 mm)	100	105	47																												■									581500
1⅜" (34.9 mm)	140	150	68									●	●																	▲	▲									581350
1⅝" (41.3 mm)	140	155	70																											■	▲									581510

R mm	Bending radius mm at the neutral axis of the bend (DVGW GW 392)
X mm	Correction dimension for a 90° or 45° bend
s mm	Wall thickness
[1]	hard, semi-hard copper pipes, also thin-walled, EN 1057
[2]	hard copper pipes EN 1057
[3]	According to DVGW work sheet GW 392 for hard and semi-hard copper pipes Ø 28 mm minimum bending radius 114 mm necessary. Wall thickness ≥ 0.9 mm.
▲	Adaptor block 10 – 40, support 10 – 40 (Art.-No. 582120) necessary.
■	Adaptor block 35 – 50, support 35 – 50 (Art.-No. 582110) necessary.
Cu:	hard, half-hard, soft copper tubes, also thin-wall, EN 1057
Cu 12735:	Copper pipes K65 for refrigeration and air conditioning technology in accordance with EN 12735-1, EN 12449
St 10312:	stainless steel pipes of the press fitting systems EN 10312, series 2, EN 10088, EN 10217-7
St 1127:	stainless steel pipes EN ISO 1127, EN 10217-7
St 10305-U:	coated, soft carbon steel pipes of the press fitting systems EN 10305-3
St 10305:	soft precision steel pipes EN 10305-1, EN 10305-2, EN 10305-3, carbon steel pipes EN 10305-3
St 10255:	Steel pipes (threaded pipes) EN 10255
St 50086:	Electrical installation pipes DIN EN 50086
U:	coated
V:	multi-layer composite tubes of pressfitting systems

Bending to size

If a bend is required at a certain point on the pipe, a length correction must be made to suit the pipe size. The correction dimension X specified in Fig. 1 must be considered for a 90° or 45° bend. The set dimension L must be reduced by the amount X here. If, e.g., the dimension L for pipe size 22 is 400 mm and a bend with a bending radius of 77 mm is to be made, the dimension line should be marked on the pipe at 319 mm. This line is then – as shown in Fig. 1 – to be aligned with the 0-mark on the bending former.

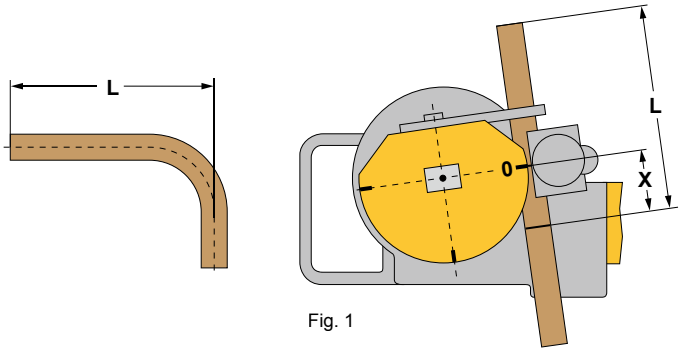

Fig. 1